Product datasheet

Specifications

Green Premium™

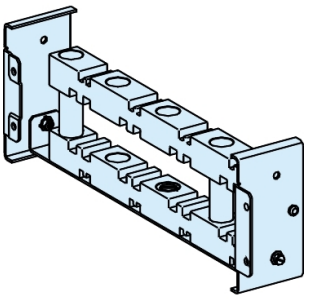

HORIZONTAL FIXED BUSBAR SUPPORT FOR LINERGY BS 5/10MM OR LINERGY LGYE

04664

Discontinued on: Jul 17, 2022

Discontinued

Main

Range	Linergy
Range Of Product	Linergy
Product Or Component Type	Busbar support
Product Name	Linergy BS
Range Compatibility	Linergy Linergy LGYE busbar Linergy Linergy BS busbar Prisma Prisma P enclosure
Product Compatibility	Busbar support

Complementary

Cubicle-Device Connection	Linergy BS horizontal busbar - fixed Linergy LGYE horizontal busbar - fixed
Installation Description	Cubicle - width 650 + 150 mm
Quantity Per Set	Set of 1
Net Weight	1.44 kg

Environment

Standards	IEC 61439-1 IEC 61439-2
Product Certifications	ASEFA

Packing Units

Unit Type Of Package 1	PCE
Number Of Units In Package 1	1
Package 1 Height	7 cm
Package 1 Width	7.3 cm
Package 1 Length	34.5 cm
Package 1 Weight	1.44 kg

Contractual warranty

Warranty	18 أشهر

Price is “List Price” and may be subject to a trade discount – check with your local distributor or retailer for actual price.

Disclaimer: This documentation is not intended as a substitute for and is not to be used for determining suitability or reliability of these products for specific user applications

Sustainability

Green Premium™ label is Schneider Electric's commitment to delivering products with best-in-class environmental performance. Green Premium promises compliance with the latest regulations, transparency on environmental impacts, as well as circular and low-CO_2 products.

Guide to assessing product sustainability is a white paper that clarifies global eco-label standards and how to interpret environmental declarations.

Learn more about Green Premium >

Guide to assess a product's sustainability >

Transparency RoHS/REACh

Well-being performance

Reach Free Of Svhc	
Toxic Heavy Metal Free	
Mercury Free	
Rohs Exemption Information	Yes

Certifications & Standards

Eu Rohs Directive	Pro-active compliance (Product out of EU RoHS legal scope) EU RoHS Declaration
China Rohs Regulation	China RoHS declaration Pro-active China RoHS declaration (out of China RoHS legal scope)
Environmental Disclosure	Product Environmental Profile
Circularity Profile	End of Life Information